GC+

Condensing high efficiency air heater with centrifugal fan

High efficiency air heater with modulating premix burner included for duct connection. Output from 15 to 150 kW.

For more information, downloads and videos, visit the GC+ page on our website

Custom-made environment friendly heating with standard Mark-equipment

In addition to the High Efficiency air heater, the Mark-range also includes a gas-fired, high performance air heater with a centrifugal fan. The GC+ is particularly suited for connection to duct systems, or systems where high pressure is required. This condensing equipment provides efficiency greater than 106% (lower value). Heat is generated via a modulating (5:1) premix burner which results in very low gas consumption.

An extensive range of additional sections has been developed for the GC+. This ensures the standard GC+ can be simply and affordably adapted to any project specification. The comprehensive capacity range (15-150 kW) also means the area of application for this type of equipment is virtually limitless. The GC+ can additionally be incorporated into an air handling unit.

The GC+ is designed to heat garages, warehouses, workshops, schools and sports halls among other applications, with or without a duct system.

Product features

- Centrifugal fan with forward curved blades
- 3-phase electric motor 1400 min-1
- V-belt transmission
- Shock absorbers
- Low noise level
- Variable air volume
- Variable delta T
- System air pressure up to 300 Pa
- Low maintenance
- Modulation range 5:1

Options:

- Centrifugal fan with backward curved blades
- Insulated fan casing
- Outdoor version available

The GC+ is operated using an Optitherm+ clock thermostat or an Interface+ module that allows a connection with the BMS (building management system) via Modbus or a 0-10V contact. Other operating options are also available.

Dimensions

B = Gas connection
C = Combustion air inlet
D = Flue gas exhaust
E = Electrical connection
F = Centrifugal fan
G = Condensation connection ø40 mm

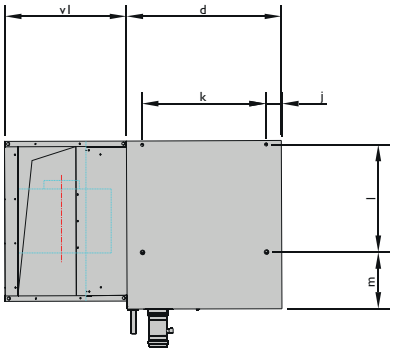

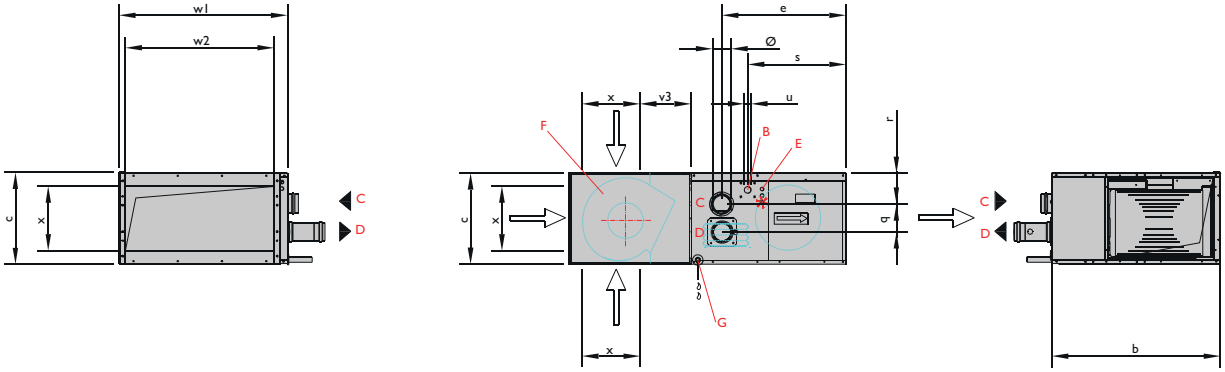

T	B	C	D	E	G	H	J	K	L	M	Ø	Q	R	S	U	V1	V3	W1	W2	X
15/25	760	410	700	560	375	669	70	560	485	255	80	120	139	444	1/2"(M)	550	182	723	670	360

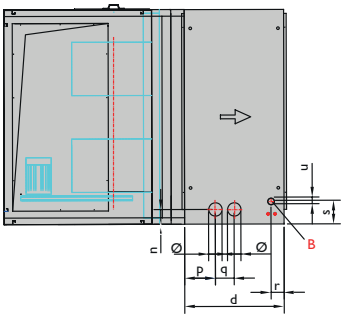

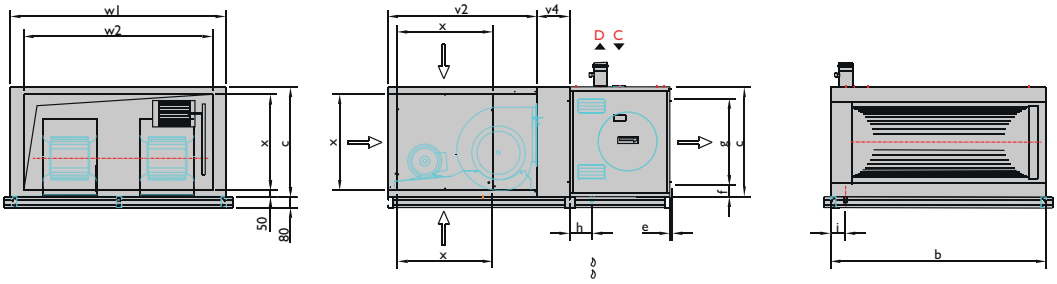

T	B	C	D	E	F	G	H	I	Ø	P	Q	R	S	U	V2	V3	V4	W1	W2	X
35	875	810	739	35	105	600	165	110	80	240	120	97	175	3/4" (M)	1100	100	244	875	675	710
40	875	810	739	35	105	600	165	110	80	240	120	97	175	3/4" (M)	1100	100	244	875	675	710
60	1120	810	739	35	105	600	165	110	100	230	140	97	175	3/4" (M)	1100	100	244	1120	920	710
80	1305	810	739	35	105	600	165	110	100	230	140	97	175	1" (M)	1100	100	244	1305	1105	710
100	1595	810	739	35	105	600	165	110	100	230	140	97	175	1" (M)	1100	100	244	1595	1395	710
135/150	1890	1000	1000	35	105	790	190	175	130	235	225	140	170	1" (F)	1100	-	304	1890	1750	800

Technical information

TYPE		15	25	35	40	60	80	100	135	150
Nominal load (upper value)	kW	16,1	27,2	38,8	44,4	66,7	88,9	110,6	149,9	166,7
Maximal power	kW	13,6	23,0	33,4	38,4	56,2	75,6	93,3	128,9	141,0
Minimal load (upper value)	kW	4,6	6,8	9,6	9,6	13,9	24,5	10,8	21,1	36,6
Minimal power	kW	4,3	6,6	9,2	9,2	13,5	23,8	10,6	20,6	35,3
Flue efficiency at maximum load (lower value)	%	94,1	93,9	95,1	95,1	93,6	94,0	93,8	95,5	94,0
Flue efficiency at minimum load (lower value)	%	106,7	107,0	106,9	106,9	107,3	107,1	107,4	107,5	107,3
Burner turndown ratio	+/-	3:1	4:1	4:1	5:1	5:1	7:1	6:1	7:1	4:1
Gas consumption G20 (15°C)	m3/h	1,56-0,45	2,61-0,66	3,65-0,88	4,18-0,88	6,22-1,34	8,16-2,25	10,30-1,78	14,05-1,98	15,30-3,37
Gas consumption G25 (15°C)	m3/h	1,75-0,49	2,95-0,74	4,10-1,02	4,73-1,02	7,03-1,47	9,30-1,40	11,57-1,85	15,98-2,25	17,05-3,75
Gas consumption G31 (15°C)	kg/h	1,13-0,32	1,91-0,48	2,68-0,64	3,17-0,64	4,72-1,04	6,22-0,89	7,76-1,34	10,51-2,23	11,69-2,57
Gas consumption G30 (15°C)	kg/h	1,19-0,33	2,02-0,51	2,92-0,72	3,46-0,72	5,05-1,11	6,70-0,96	8,19-1,48	11,1-1,85	12,35-2,72
Minimum air displacement (20˚C)	m3/h	1250	2000	3760	3760	5640	7520	9400	12500	14000
Delta T (ΔT)	K	32,7	34,5	26,6	30,3	30,3	30,3	31,3	30,8	30,5
Nominal air displacement (20˚C)	m3/h	1400	2300	5000	5000	6500	10000	12500	18500	18500
Delta T (ΔT)	K	29,2	30,0	20,0	22,8	26,3	22,8	23,5	20,8	23,1
Maximum air displacement (20˚C)	m3/h	4100	4100	7200	7200	8640	13680	16200	20880	20880
Delta T (ΔT)	K	10,0	16,8	13,9	15,8	19,8	16,7	18,1	18,4	20,5
Fan		9-7	9-7	12-12	12-12	12-12	twin 12-19	twin 12-12	twin 15-15	twin 15-15
Dimensions fan	max.	-	-	112	112	112	112	112	132	132

External pressure = 0-300 Pa, more on request
G25 = Natural gas, G20 = Natural gas, G31 = Propane, G30 = Butane

Accessories – flue gas exhaust

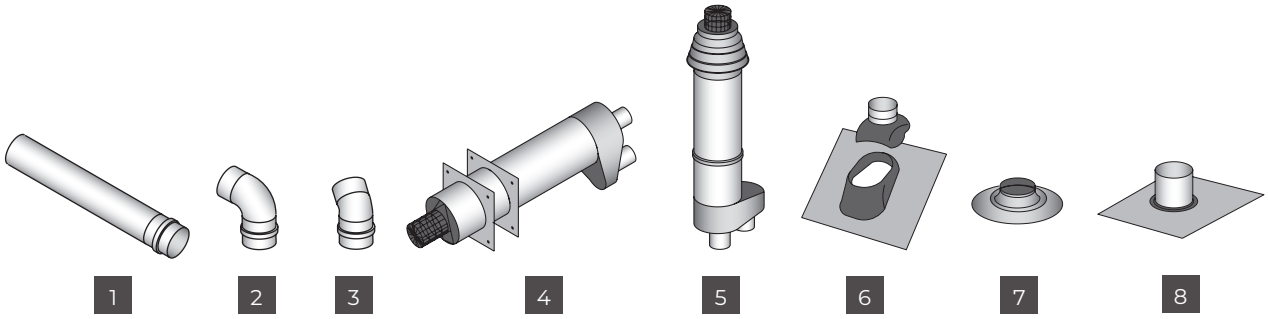

1 Extension set
2 90˚ elbow
3 45˚ elbow
4 Single flue set horizontal
5 Single flue set vertical
6 Roof flashing for pitched roof
7 Adhesive plate
8 Flexible roof flashing for cladded roof

Assembly/location suggestions

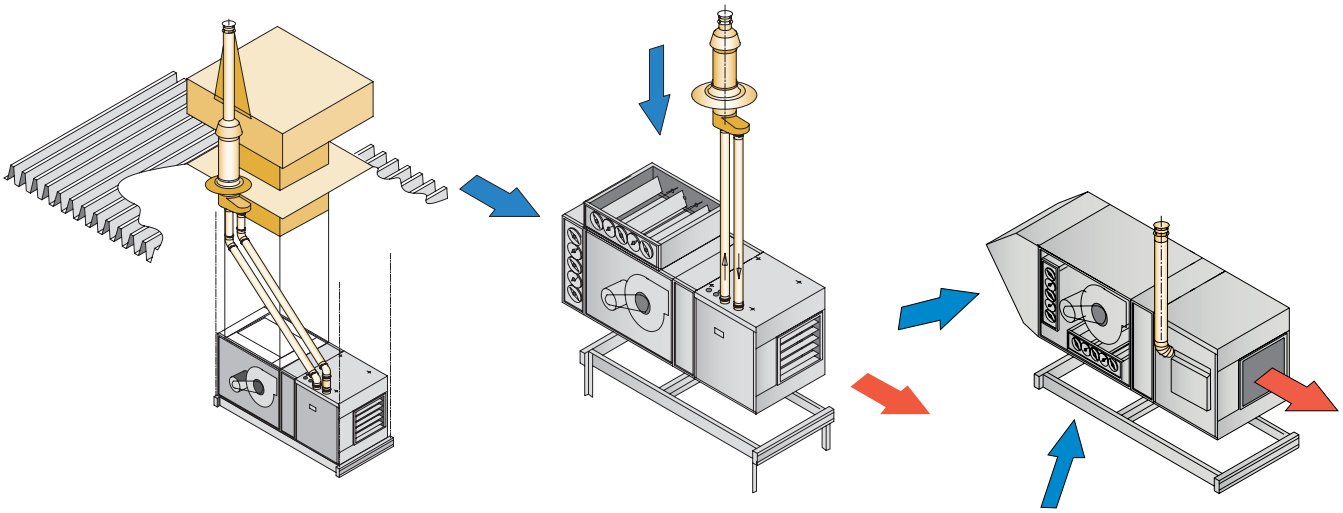

Accessoires - aanbouwelementen

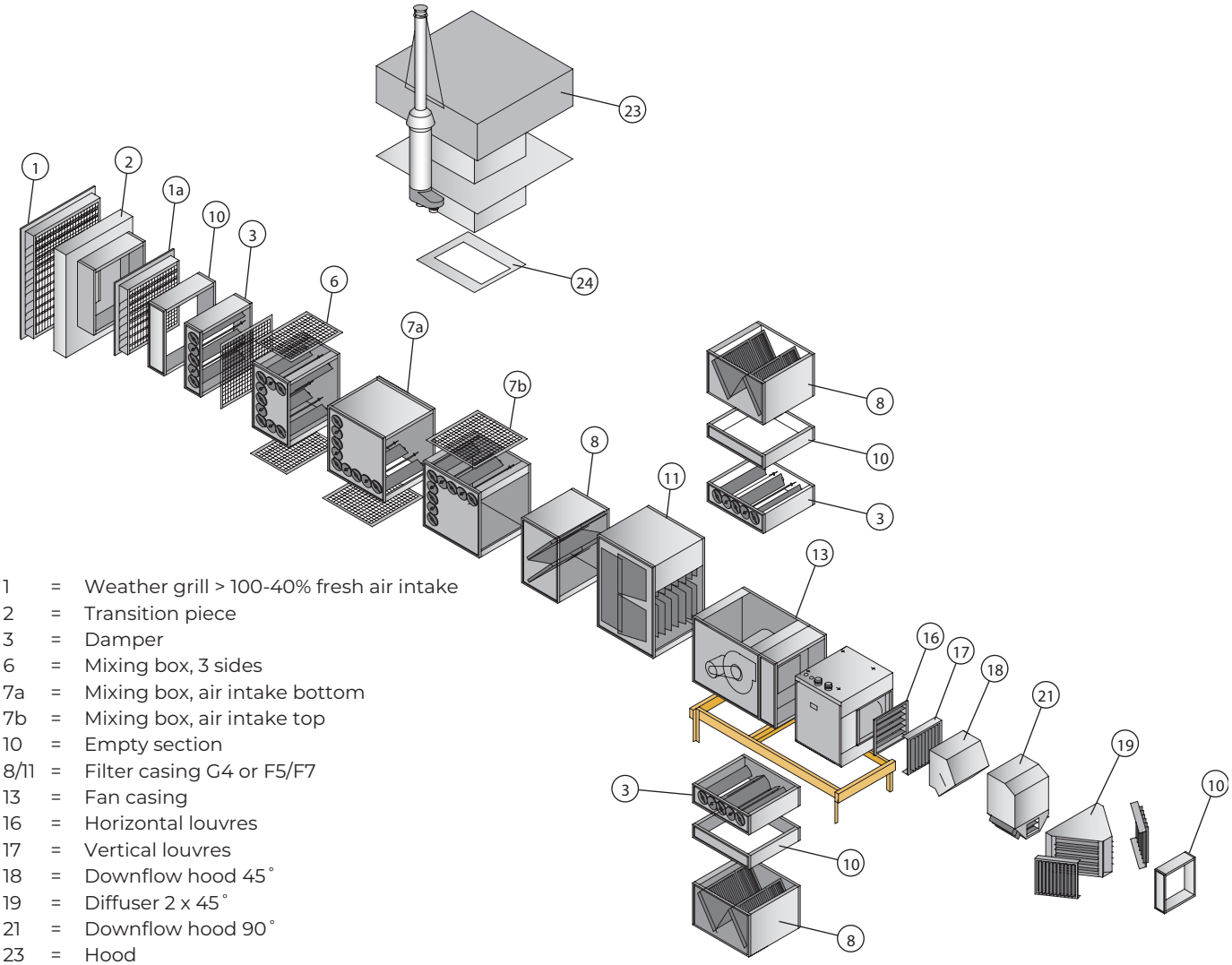

1 = Weather grill > 100-40% fresh air intake
2 = Transition piece
3 = Damper
6 = Mixing box, 3 sides
7a = Mixing box, air intake bottom
7b = Mixing box, air intake top
10 = Empty section
8/11 = Filter casing G4 or F5/F7
13 = Fan casing
16 = Horizontal louvres
17 = Vertical louvres
18 = Downflow hood 45°
19 = Diffuser 2 x 45°
21 = Downflow hood 90°
23 = Hood
24 = Transition piece

Controls

max. 8 units

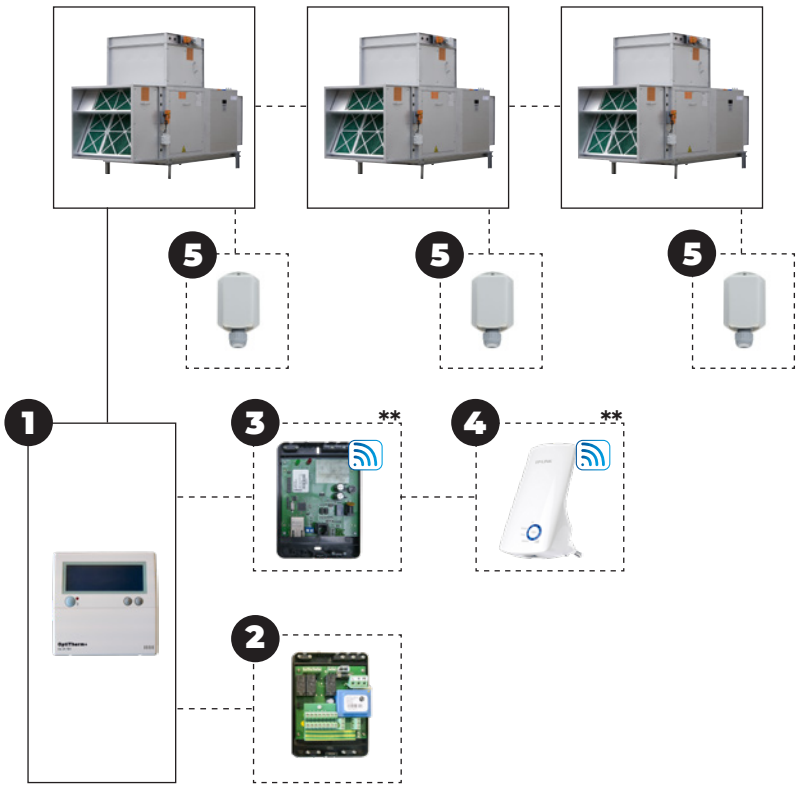

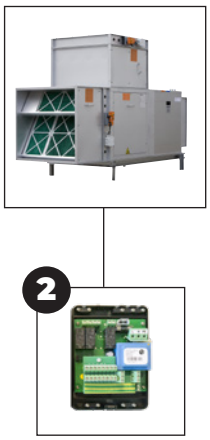

Control combination options

Room temperature control

GC+	+	1						
GC+	+	1	+	5				

Room temperature control in combination with remote control

A remote connection with the mobile phone app is only possible when using a Web module. A WiFi bridge can be added to create a wireless connection.

GC+	+	1	+	3						
GC+	+	1	+	3	+	4				
GC+	+	1	+	5	+	3				
GC+	+	1	+	5	+	3	+	4		

Room temperature control in combination with Modbus

Allows you to read the status and change the settings of the Optitherm+.

GC+	+	1	+	2	+	5		
GC+	+	1	+	2				

Capacity control with external 0-10V signal or Modbus

Heating / Continuous ventilation / reset contacts / Modbus communication

GC+	+	2	

** Temporarily unavailable

See price list GS+ for description and code numbers of the relevant items